REV.	DESCRIPTION	APP.	DATE
A	NEW DESIGN		

CUSTOMER COPY

ORDER INFORMATION

1398 0 53 05 X

- 1:Plating Tin
- No of contact
- Type
- MINI DIN+RCA JACK

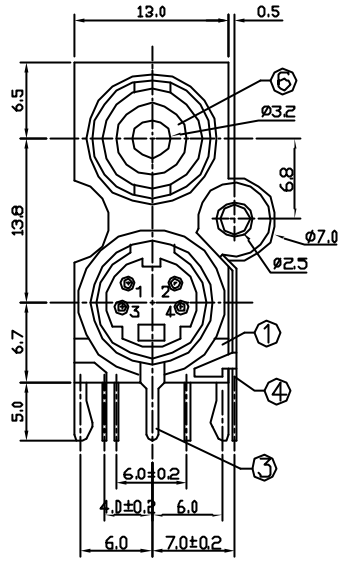

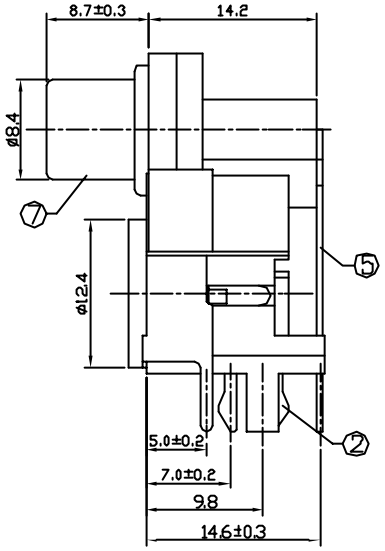

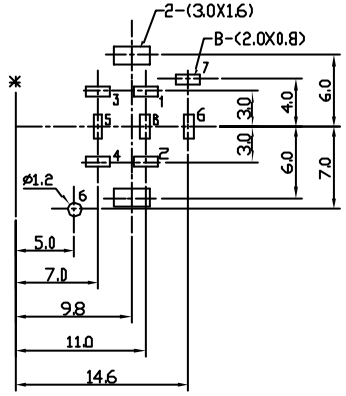

T:1.6 Dimensions of PC board holes

Talerance : ±0.1(Printed-tap view)

	S JACK	PIN JACK	
SCHEMATIC	135 428	6 7 6	
COLOR	BLACK	WASHER	
		HOUSING	

UNLESS OTHERWISE SPECIFIED, TOLERANCE ON DECIMAL: ±0.3

LEAD FREE

LTR	PART NAME	QTY	MATERIAL	REMARK
7	OUTER CONTACT	1	BRASS	MB:Cu Cu/Sn PLATED
6	WASHER	1	ABS	
5	CONTACT FOOT	2	BRONZE	MB:Cu Ag PLATED
4	CONTACT FOOT	1	BRASS	MB:Cu Cu/Sn PLATED
3	CONTACT FOOT	1	BRASS	MB:Cu Cu/Sn PLATED
2	CONTACT FOOT	4	BRONZE	MB:Cu Ag PLATED
1	HOUSING	1	PBT	

ACMELUX CO., LTD.

TEL:886-85124595 FAX:886-85124322

0.0± 0.30	SCALE: 1:1	TITLE: PIN JACK+S JACK	PART NO: WT-04019B1
0.00± 0.20	UNIT: mm		APP BY: Hung
0.000±0.10		MATL: RoHS	CHK BY: Cheryl
		DWG. NO. C1398053051	DR BY: Amos A243